100201-0035

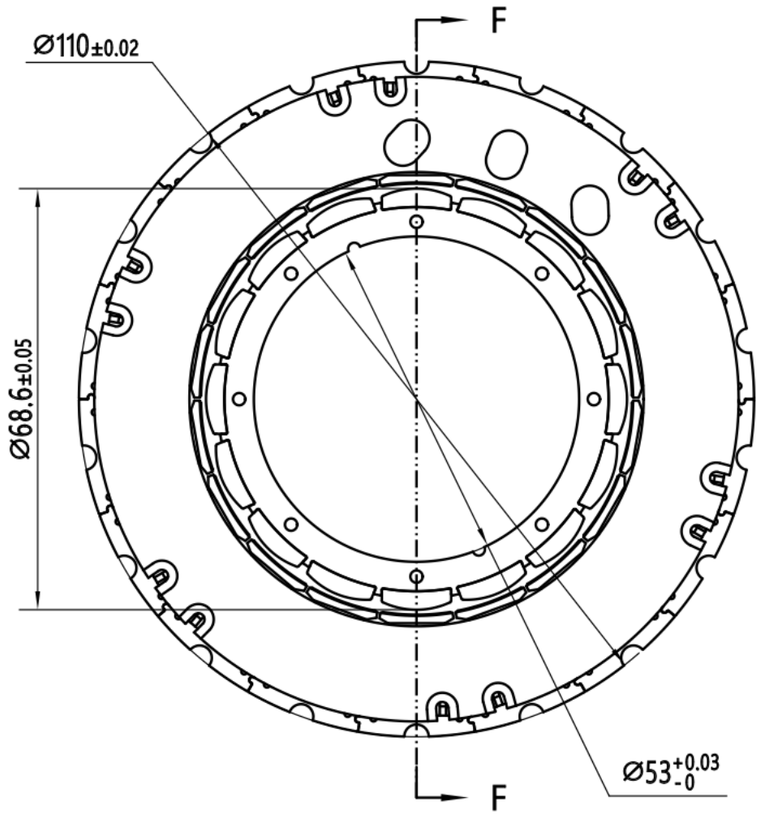

F - F

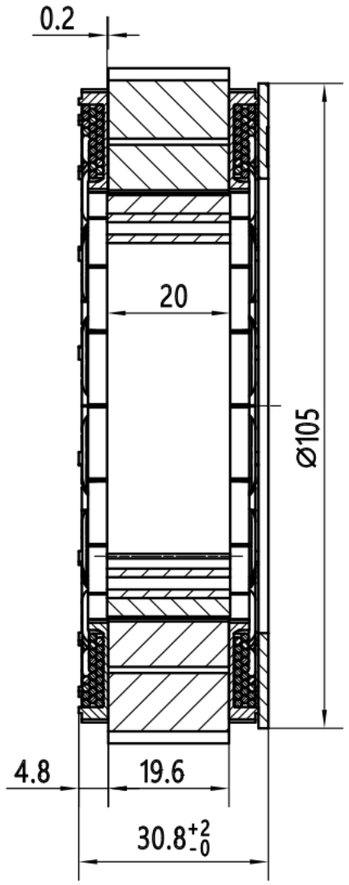

Remarks:
1.The motor is not welded,the outer surface is secured with cable ties.
2.The motor is not potted(varnished)
3.The axial dimension does not include the height of the weld joint.

Number of phases	3	Peak Current(Arms)	13.5
Number of Poles	16	Back EMF constant(Vrms/krpm)	42.1
Phase Resistance(Ohms@20)	0.46	Torque Constant (N·m/A)	0.59
Phase Inductance(mH @1kHz)	2.5	Insulation Class	F 155℃
Rated Voltage(VDC)	220	Dielectric Strength	1500VAC 1SEC
No-Load Speed(rpm)	5000	Insulation Resistance	500Mohms@500VDC
No-load Current (Arms)	0.54	Rotor Inertia(kg·mm²)	189.36
Rated Torque(N·m)	3.2	Weight(kg)	1.18
Rated Speed(rpm)	3000	Operating Environment	-20℃~60℃
Rated Current(Arms)	5.4	Storage Environment	-30℃~85℃
Peak Torque(N·m)	8		

标记	处数	分区	更改文件号	更改内容	签名	年 月 日
				首次发布		

设计			标准化		阶段标记	量(kg) 比例
校核			工艺			1:1
会签			审核		版本	V 1
批准					共 1 张	第 1 张

Laifual

BLDC Motor

MM-142-A